

IndoTeak™

INSTALLATION GUIDE · INDOTEAK RECLAIMED TEAK DECKING

Decking Installation

Field instructions for installing IndoTeak reclaimed-teak decking — covering acclimation, substructure, hidden-fastener (pre-grooved) and face-screw (solid) methods. Sustainable teak, built to last a lifetime.

PROFILES	METHODS	DOCUMENT
1″ × 6″ · ¾″ × 5¼″	Hidden & Face-fix	IT-DECK-INSTALL · Rev 2026.06

BEFORE YOU BEGIN

00 Overview & Product Reference

IndoTeak decking is 100% reclaimed Indonesian teak — a dense, naturally oil-rich hardwood. Both profiles install over a ventilated substructure and accept either a concealed clip or a top-fixed screw. Read the full guide before opening bundles; correct acclimation and gapping are not optional with a natural hardwood.

In This Guide

01	**Acclimation & Storage**	Site delivery, stacking, and the rest period before install.
02	**Substructure & Joist Spacing**	Ventilation, slope, span limits and on-center spacing.
03	**Hidden-Fastener Install**	Pre-grooved profiles with DeckWise® Ipe Clip® fasteners.
04	**Face-Screw Install**	Solid (ungrooved) profiles, top-fixed with stainless screws.

The Two Profiles

FULL PLANK

1″ × 6″

True dimension	1.000″ × 6.000″
Max joist spacing	16″ O.C.
Best for	Elevated & structural decks
Pre-grooved option	Yes — on request

SLIM PROFILE

$\frac{3}{4}$″ × 5$\frac{1}{4}$″

True dimension	0.750″ × 5.250″
Max joist spacing	12″ O.C.
Best for	Low-profile & over-slab
Pre-grooved option	Yes — on request

SPECIFY AT ORDER

Both profiles ship **solid-edge by default**. Pre-grooved edges for hidden fasteners are machined to order — confirm the method before your material is milled, as the two are not interchangeable on site.

01 WOOD WITH SOUL — TREAT IT AS SUCH

Acclimation & Storage

Teak still moves with moisture, so let the boards settle to the site before you fasten anything. Allow **5 days** of on-site acclimation.

1. **Inspect on delivery**
   Check bundles against the packing list and confirm profile and pre-grooved / solid. Report any transit damage before installing.

2. **Acclimate 5 days on-site**
   Leave the boards in their pallet and let them acclimate where they will be installed — covered from rain and direct sun, but open to ambient air.

3. **Keep the pallet dry**
   Keep the pallet off the ground and out of standing water. Avoid sealed plastic wrap, which traps humidity.

> DISCLOSURE — PLUGS IN RECLAIMED TEAK
>
> Because this is genuine reclaimed teak, some boards arrive with wooden plugs already set into them — filling original bolt and fastener holes from the wood's first life. These plugs are part of the material and a mark of its history, not a defect. Expect natural variation in grain and tone from board to board.

02 THE DECK IS ONLY AS GOOD AS ITS FRAME

Substructure & Joist Spacing

Install over a sound, level, well-ventilated substructure of pressure-treated timber, hardwood, or aluminium joists. Every board end must land on a joist — no unsupported butt joints.

Requirements

Slope substructure 1–2% for drainage	Run-off
Air gap beneath boards for ventilation	≥ 1″
Joists level & coplanar within 1⁄8″	Flat
Double / sister joists at all butt joints	Support
Blocking under picture-frame borders	Edges

DIAGONAL LAYOUTS

Running boards at 45° increases the unsupported span. Reduce joist spacing by ~25% (e.g. 16″ → 12″).

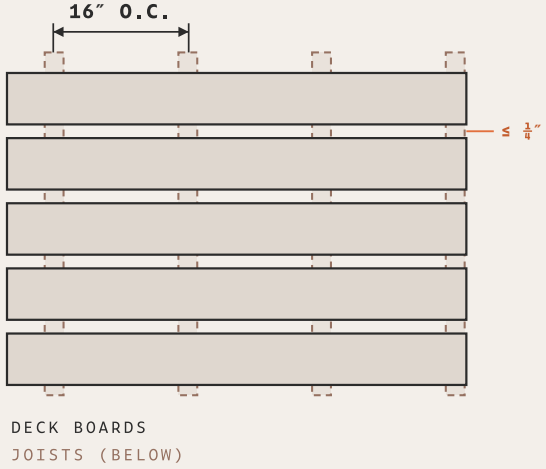

FIG. 2.1 — PLAN VIEW **BOARDS SPAN PERPENDICULAR TO JOISTS**

On-Center Joist Spacing

PROFILE	STRAIGHT LAY (90°)	DIAGONAL (45°)	NOTES
1″ × 6″ — Full Plank	16″ O.C. max	12″ O.C. max	Reduce to 12″ for commercial / high-traffic loads.
¾″ × 5¼″ — Slim Profile	12″ O.C. max	10″ O.C. max	Closer spacing required; ideal over a solid sub-deck.

03 Hidden-Fastener Install

PRE-GROOVED PROFILES · DECKWISE® IPE CLIP®

For a clean, fastener-free surface. IndoTeak specifies **DeckWise® Ipe Clip®** hidden fasteners: the clip seats into the machined side groove and screws down into the joist, holding two boards while setting a consistent 3⁄16″ gap automatically.

REQUIRES PRE-GROOVED BOARDS

This method only works with the pre-grooved profile ordered for hidden fixing and a DeckWise® Ipe Clip®. Solid boards cannot be retro-grooved reliably on site.

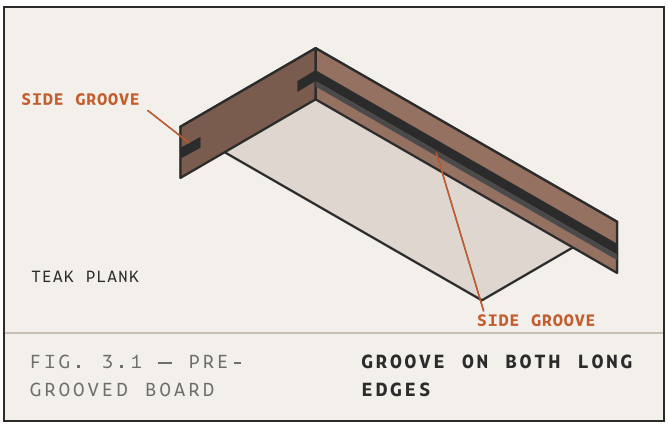

FIG. 3.1 — PRE-GROOVED BOARD — **GROOVE ON BOTH LONG EDGES**

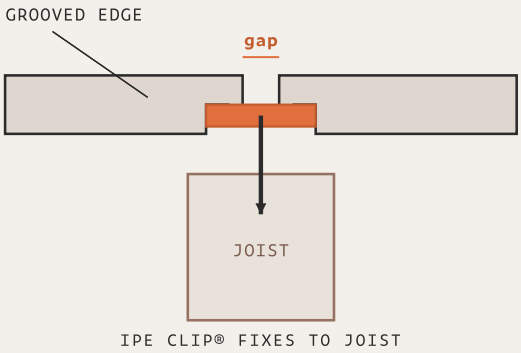

FIG. 3.2 — SECTION — **CLIP SEATS IN GROOVE, SCREWS TO JOIST**

1 Set the starter board

Fix the first board along a chalked reference line. Face-screw or use a starter clip at the wall edge, keeping a ¼–3⁄8″ expansion gap to any wall or fixed object.

2 Seat an Ipe Clip® at every joist

Drop a DeckWise® Ipe Clip® into the groove directly over each joist. Use one clip per board-to-joist intersection — never skip joists.

3 Drive the clip screw

Fasten each clip to the joist with the DeckWise stainless screw supplied, square and snug. The clip wing sets the 3⁄16″ side gap and locates the next board.

4 Engage the next board

Slide the next board's groove onto the exposed clip wings and tap home with a block. Repeat clip-and-screw down the run.

5 Stagger ends & finish the last board

Land all butt joints on doubled joists and stagger them. Face-fix the final board at the far edge where a clip can't be reached.

04 SOLID PROFILES · TOP-FIXED
Face-Screw Install

The traditional, maximum-hold method for solid (ungrooved) boards. Teak is dense and oily — **pre-drilling and countersinking are mandatory** to prevent splitting and surface fracture.

> FASTENERS
>
> Use 305 or 316 stainless steel only — 316 in coastal / marine settings. Never use coated or galvanised steel: teak's tannins corrode them and leave black streaks.

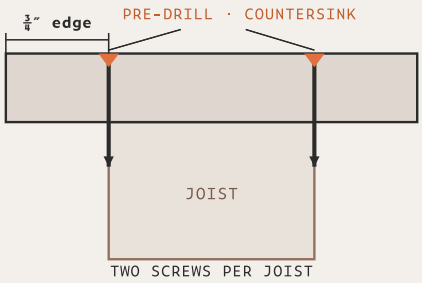

FIG. 4.1 — SECTION **TWO SCREWS PER BOARD PER JOIST**

1 Lay out & set the first board

Chalk a straight reference line. Hold a ¼–⅜″ expansion gap at walls. Square the first board to the structure — it sets every board after it.

2 Pre-drill & countersink

At every joist, drill two pilot holes through the board, ~¾–1″ in from each edge. Countersink so screw heads finish flush or just below the surface.

3 Drive stainless screws

Set #10 × 2″ (min) 305/316 stainless deck screws — two per board at each joist. Snug, not over-driven; don't crush the fibres.

4 Set a consistent side gap

The side gap is your choice — up to a recommended **¼″ maximum**. Pick a spacer, keep the gap uniform along the run; it carries drainage and seasonal movement.

5 Stagger end joints

Land all butt joints on doubled joists and stagger them between rows so no two ends line up.

PIN THIS TO THE JOB-SITE WALL

Quick Reference & Finishing

SIDE GAP	END / WALL GAP	ACCLIMATION
Up to ¼″	**¼–⅜″**	**5 days**
Installer's choice · ¼″ max	Expansion at perimeter	On-site, in pallet, covered

ITEM	SPECIFICATION
Fasteners	305 stainless min · 316 stainless for coastal / marine. No coated or galvanised steel.
Hidden fasteners	DeckWise® Ipe Clip® with stainless screw, one per board-to-joist intersection (pre-grooved profile only).
Face screws	#10 × 2″ stainless, two per board per joist, pre-drilled & countersunk.
Joist spacing	1″×6″ → 16″ O.C. · ¾″×5¼″ → 12″ O.C. · reduce ~25% on diagonal lays.
Butt joints	Land on doubled / sistered joists; stagger between rows; never unsupported.

Finishing & First-Season Care

Left untreated, teak weathers to an even silver-grey — this is cosmetic, not structural. To keep the honey tone, clean the deck, let it dry, and apply a penetrating teak / UV oil, then reapply seasonally. There are many good finishing products — use the one you're confident with, or **contact us for finishing tips** tailored to your site and climate.

PREFINISHED DECKING

If your boards shipped **prefinished**, follow the care and recoat instructions for that specific finish — not the bare-teak guidance above. Ask us for the finish-specific instruction guide before cleaning or recoating.

+ DO	× DON'T
+ Acclimate before fastening	× Install boards straight off the truck
+ Pre-drill & countersink every face screw	× Use coated or galvanised steel
+ Use stainless fasteners only	× Retro-groove solid boards on site
+ Keep gaps uniform with spacers	× Over-drive or crush screw heads
+ Land butt joints on doubled joists	× Skip clips or joists to save time

Questions on a specific install?

Our team supports every project. Reach us at **sales@indoteakdesign.com** or visit **indoteak.com**. Zero Trees Harmed — real teak from the archipelago.